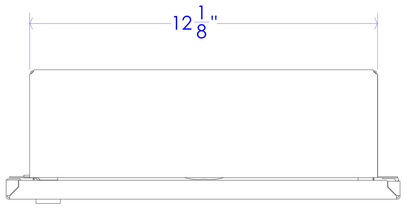

Top view

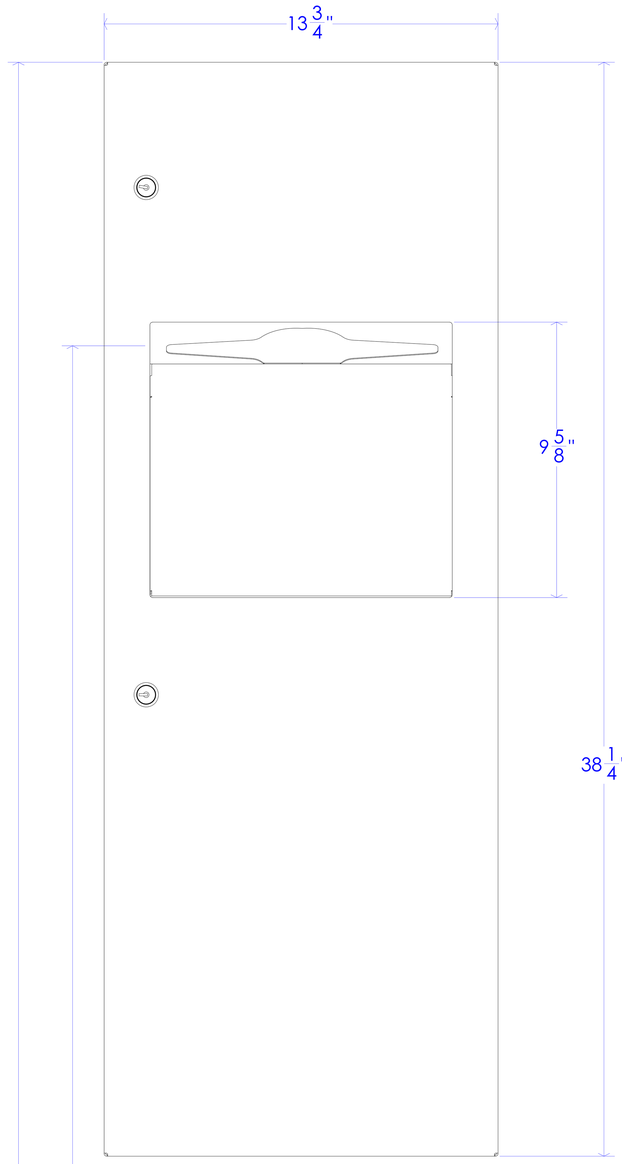

Front view

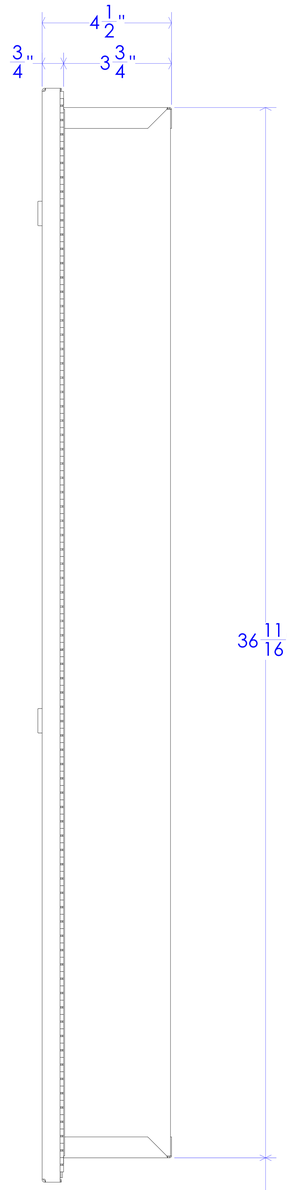

Side view

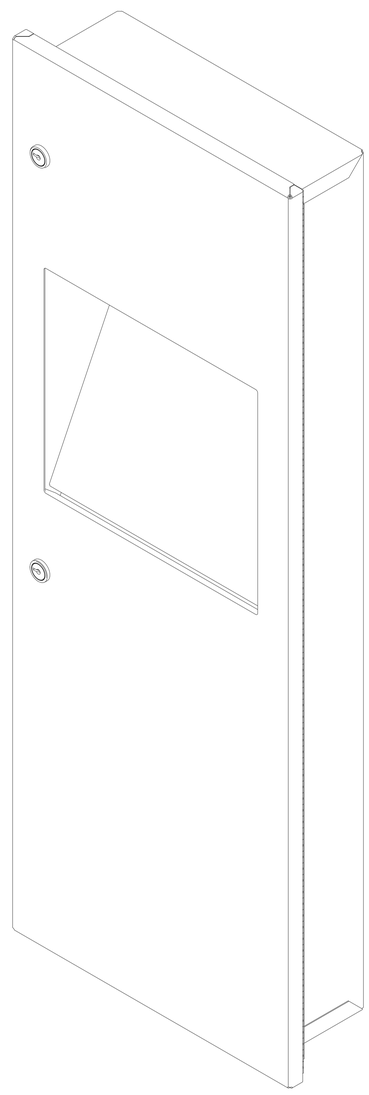

3D view
code 410-14

57" (1447mm)

48" (1220mm) Max.

18" (457mm)
Max. bottom of
rough opening to
floor for barrier
free mounting

Floor

PROPRIETARY AND CONFIDENTIAL
THE INFORMATION CONTAINED IN THIS DRAWING IS THE SOLE PROPERTY OF FROST PRODUCTS LTD. ANY REPRODUCTION IN PART OR AS A WHOLE WITHOUT THE WRITTEN PERMISSION OF FROST PRODUCTS LTD. IS PROHIBITED.

FROST PRODUCTS LTD.
5280 JOHN LUCAS DRIVE, BURLINGTON, ON, L7L 5Z9

DATE: September 8, 2021	TITLE: 410-14 Combination unit	DWG NO. 410-14 CAD
DO NOT SCALE DRAWING		
UNLESS OTHERWISE SPECIFIED DIMENSIONS ARE IN INCHES.		SCALE: 1:1